ZENLINE VERTICAL RPT

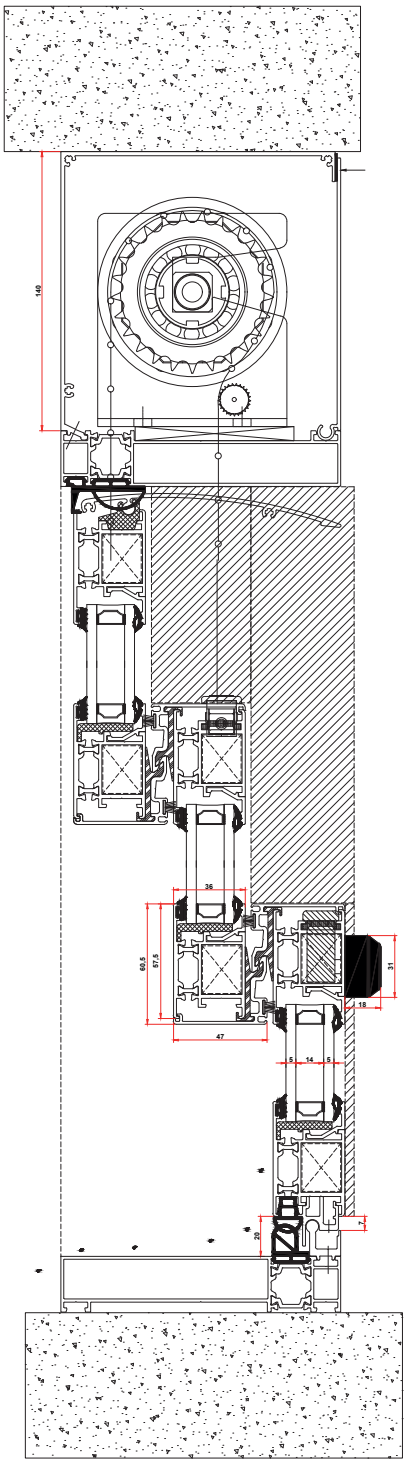

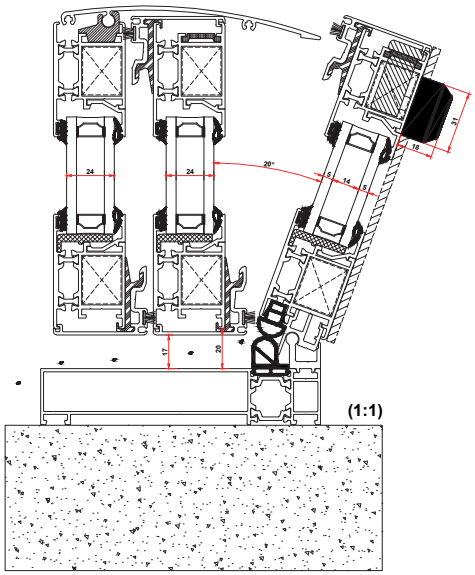

(1:1)

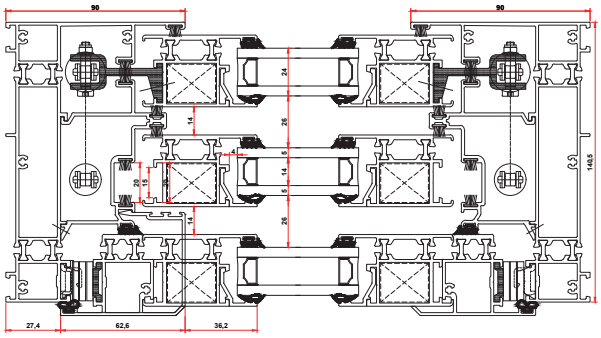

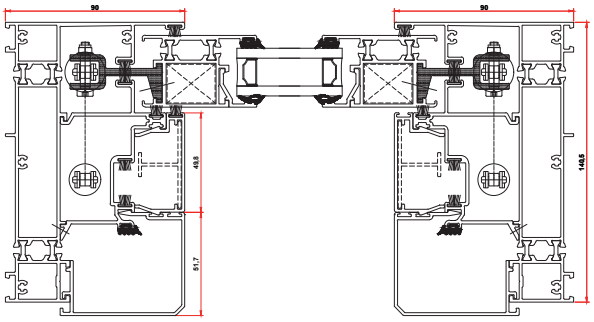

(1:1)